Prefect*irus*

PRE2000W-3 Single element hot water tank

PRE2000CU3 PRE2000PU3 PRE6000

Wiring diagram page **1** of 1

Cleverly simple **control** of energy.

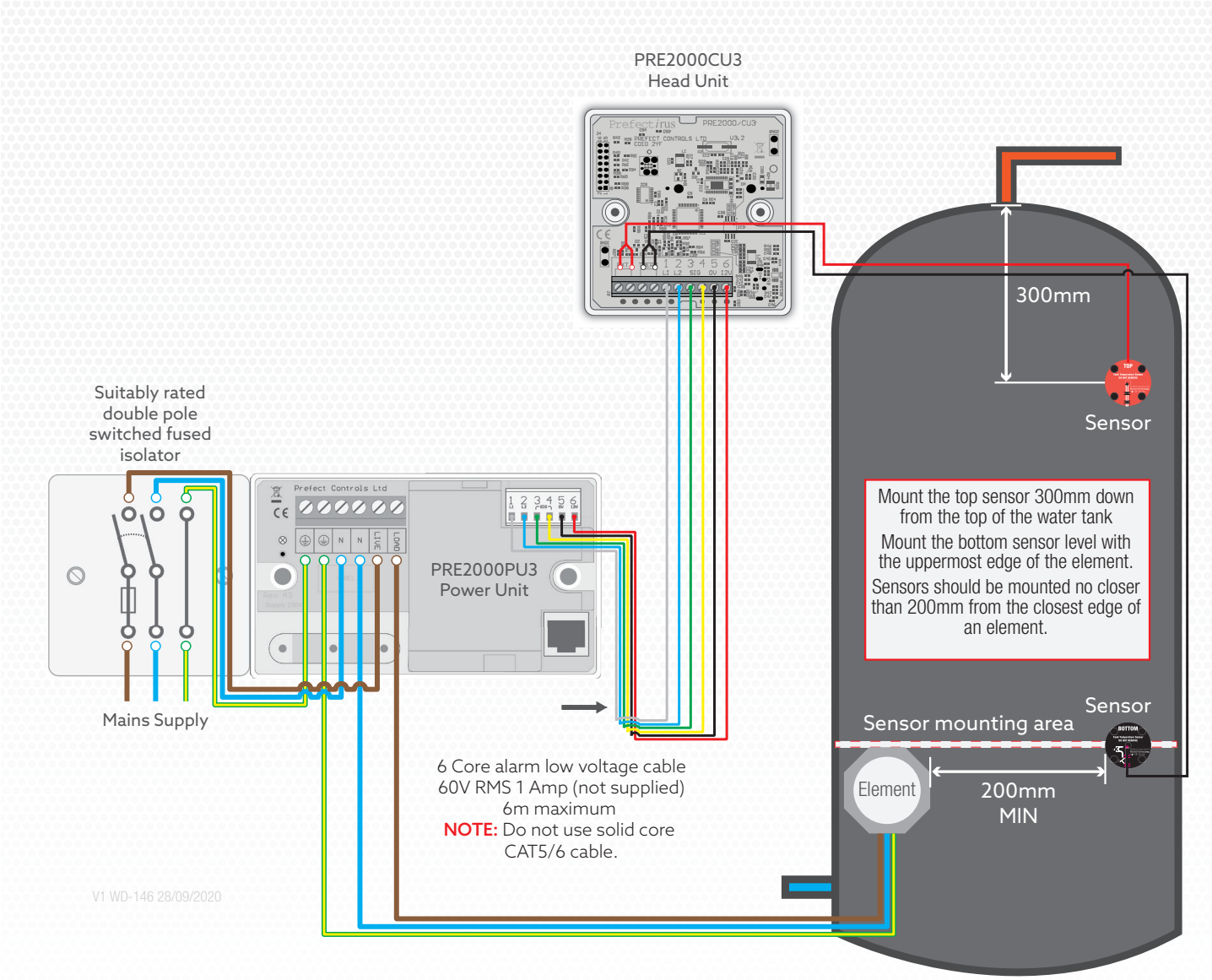

Due to our policy of continuous improvement, we reserve the right to change specifications without notice.
All information was correct at time of when this product file was produced - September 2020

Prefect Controls Limited, Unit 2, Church Field Business Park, Church Field Road, Sudbury CO10 2YF
01787 320604 | **mail@prefectcontrols.com** | **prefectcontrols.com**