Prefect*irus*

Standard wet heating

PRE2000CU3 PRE2000PUR PRE9501 Key switched fused spur

Wiring diagram page **1** of 1

Cleverly simple **control** of energy.

When using the PRE2000 in conjunction with a heating control valve a 230V AC normally closed valve should be used. If connecting to an existing control valve ensure the valve is controlled by mains voltage and is fully operational being able to fully open and close the valve. Position the PRE2000PUR close to the control valve that it is to control. Mount in a 25mm or deeper back box. A double pole key switch must be used, providing tamper-proof double pole isolation. The PRE2000CU3 should be mounted at least 300mm away from the nearest edge of the radiator, and protected from artificial heat sources for example: Desktop computers, TV's, Desk lamps etc. Do not mount close to forced ventilation. The PRE2000CU3 is equipped with a PIR for presence detection, be sure to mount the PRE2000CU3 in such a position to provide a clear view of the required detection area, the maximum detection range is 5m. The Thermostat should be mounted between 1200mm and 1400mm from finished floor level. Mount in a 25mm or greater back box. If mounting in a surface sunken metal box the top and bottom box lugs must be removed.

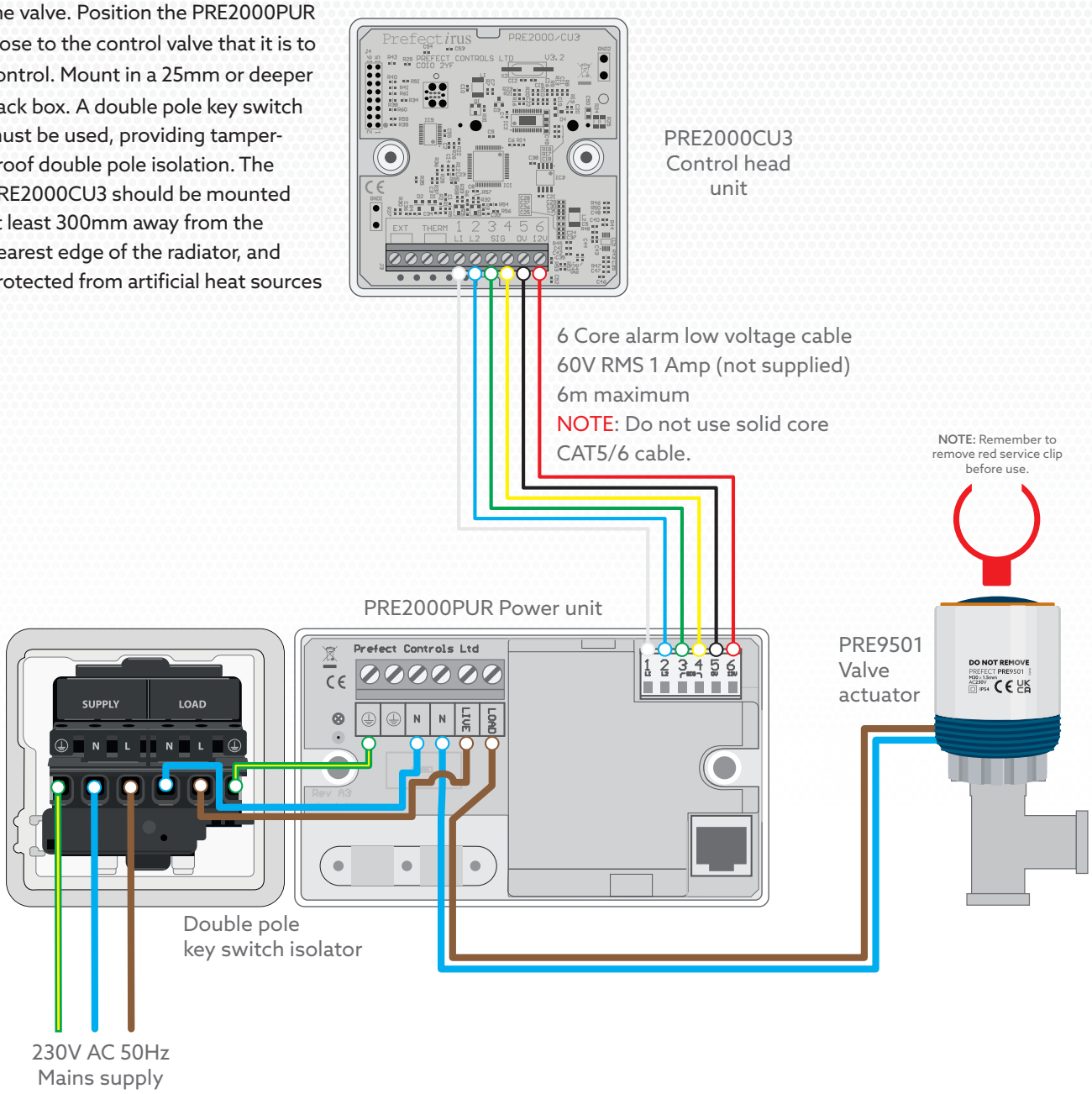

WD-154 IRUS_Standard wet radiator_PRE2000CU3_PRE2000PUR_PRE9501_Nov2022

Due to our policy of continuous improvement, we reserve the right to change specifications without notice.
All information was correct at time of when this product file was produced - March 2022

Prefect Controls Limited, Unit 2, Church Field Business Park, Church Field Road, Sudbury CO10 2YF
01787 320604 | **mail@prefectcontrols.com** | **prefectcontrols.com**